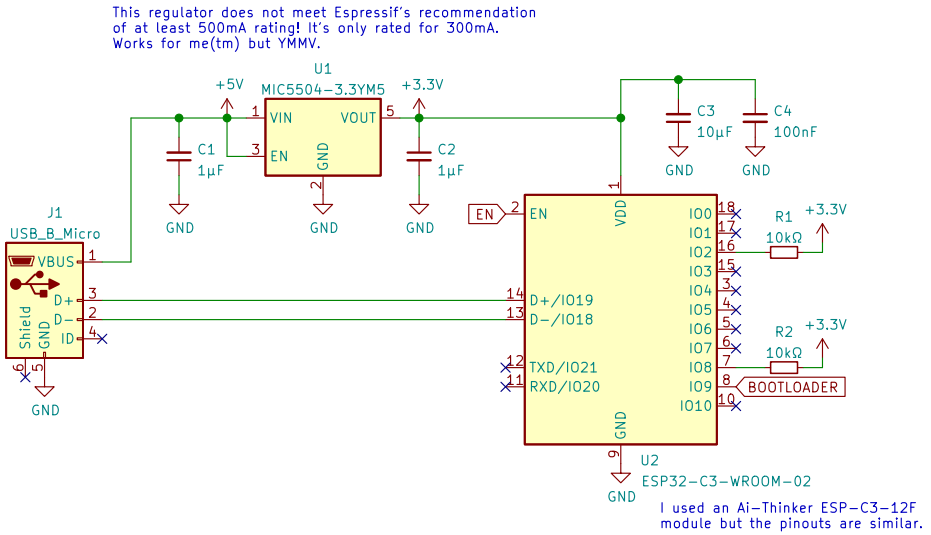

Bare minimal external components to get an
ESP32-C3 module working and program it over USB.

ansemjo

Sheet: /
File: esp32-c3-minimal-module.kicad_sch

Title: ESP32-C3 minimal

Size: A5	Date: 2021-09-03	**Rev: 1.0**
KiCad E.D.A. eeschema (5.99.0-12108-ga1521d338e)		Id: 1/1